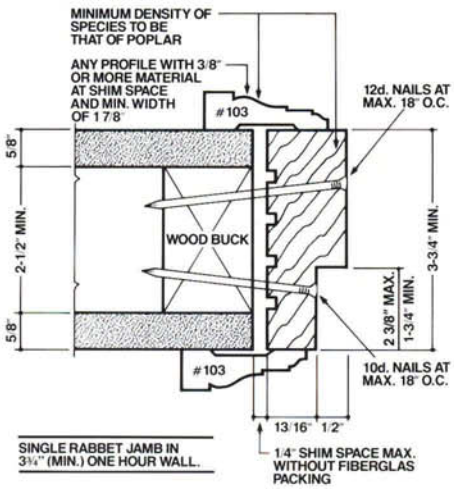

SINGLE RABBET JAMB IN 3¾" (MIN.) ONE HOUR WALL.

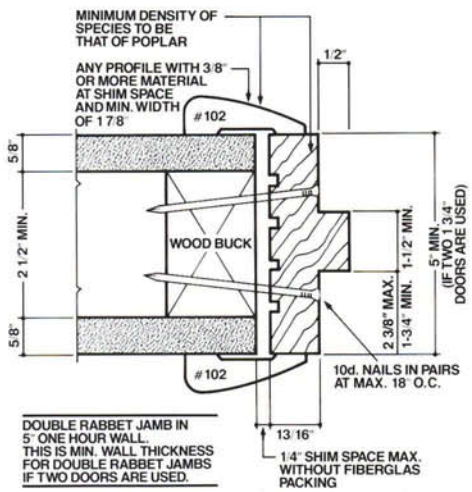

DOUBLE RABBET JAMB IN 5" ONE HOUR WALL. THIS IS MIN. WALL THICKNESS FOR DOUBLE RABBET JAMBS IF TWO DOORS ARE USED.

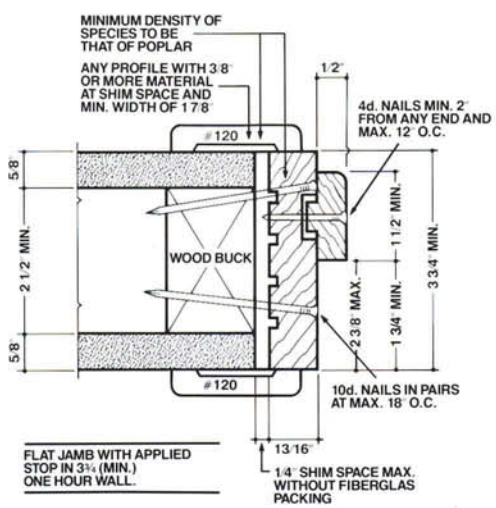

FLAT JAMB WITH APPLIED STOP IN 3¾ (MIN.) ONE HOUR WALL.

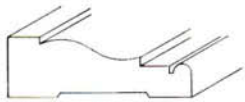

*WBM 101 3/4 × 2 1/4

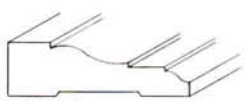

*WBM 103 11/16 × 2 1/4

WBM 105 3/4 × 2 3/4

WBM 121 9/16 × 1 7/8

WBM 109 11/16 × 2 1/2

WBM 111 11/16 × 2 5/8

*WBM 120 7/16 × 2 1/4

*WBM 117 13/16 × 3

WBM 119 3/4 × 2 1/16

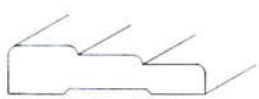

WBM 123 5/8 × 2 1/2

WBM 125 9/16 × 3 1/4

WBM 102 11/16 × 2 1/4

*WBM 104 11/16 × 2 1/2

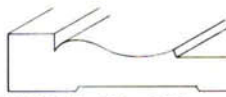

*WBM 107 3/4 × 3 1/4

*WBM 108 11/16 × 2 5/8

WBM 110 3/4 × 2 11/16

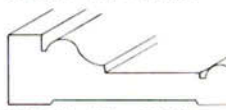

*WBM 113 7/8 × 2 15/16

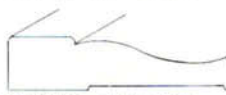

*WBM 115 11/16 × 3 1/2

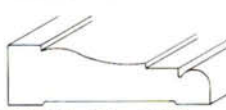

*WBM 118 3/4 × 2 9/16

*WBM 122 3/4 × 3 5/8

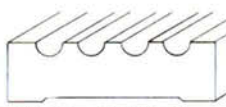

*WBM 124 3/4 × 2 5/8

WBM 126 11/16 × 2

Thickness may be varied on all profiles.

***Width may be varied on these profiles only.**

New profiles are added each year to our selection of door casings. Please contact us for the most current selection.

WALKER BROS. MILLWORKS INC.

12800 West Colonial Drive, Winter Garden, Florida 34787
Phone: (407) 656-2430 * Fax: (407) 656-4570